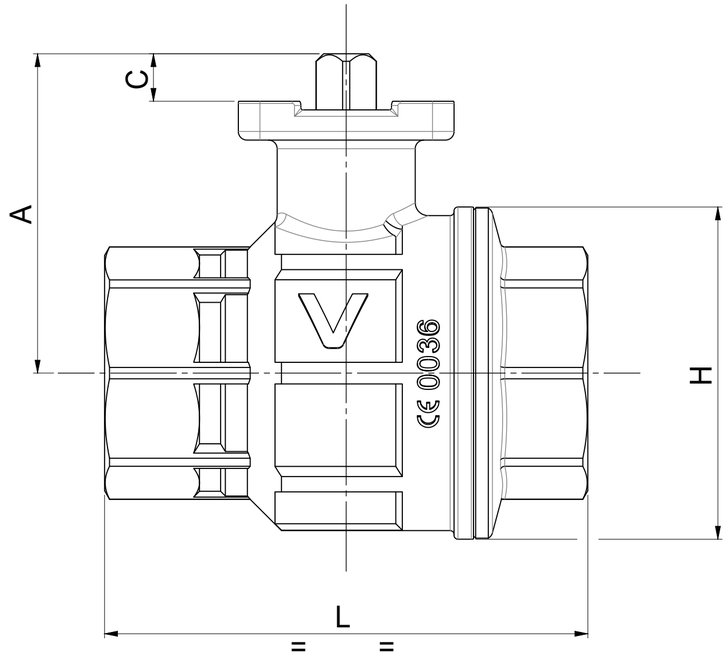

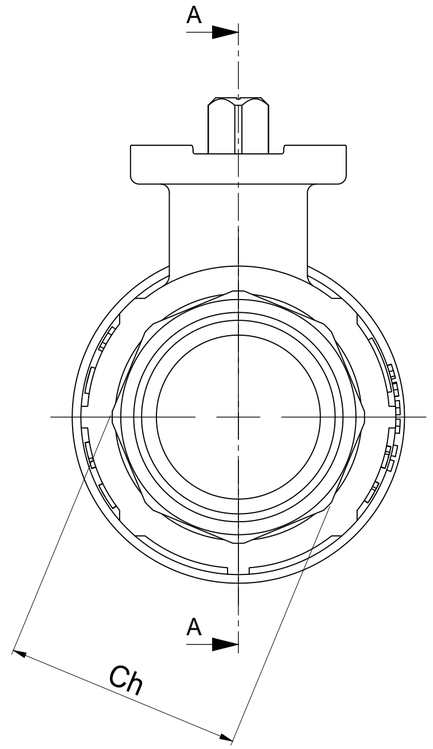

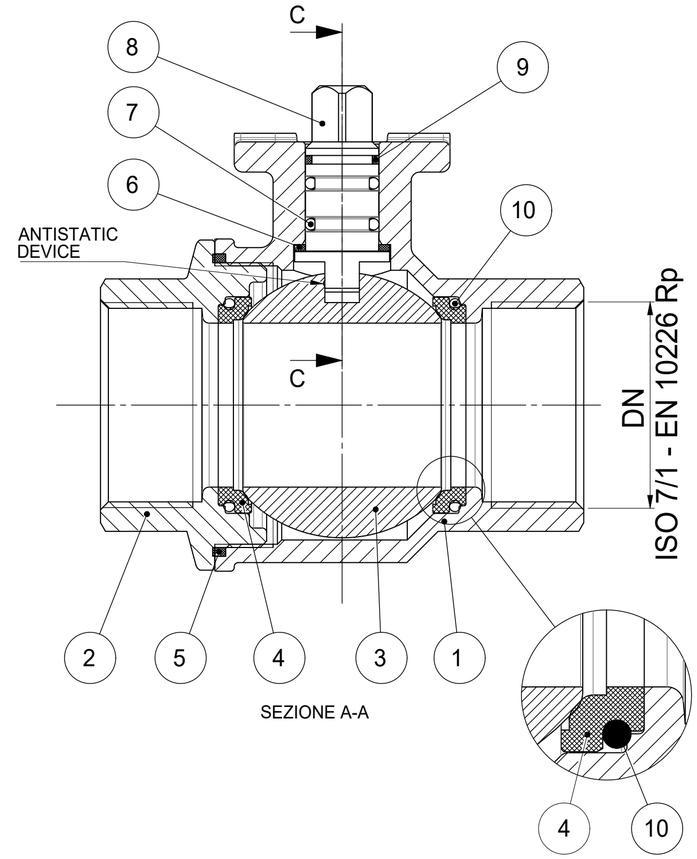

SEZIONE A-A

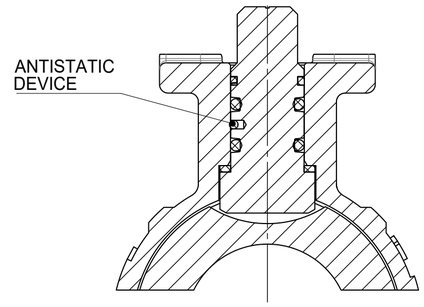

SEZIONE C-C

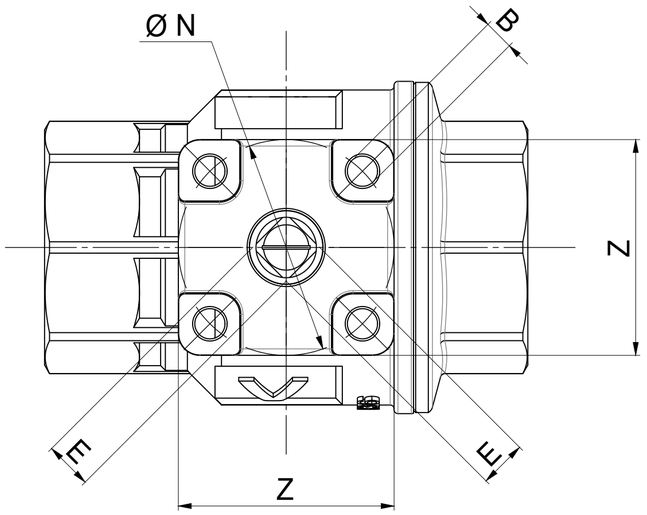

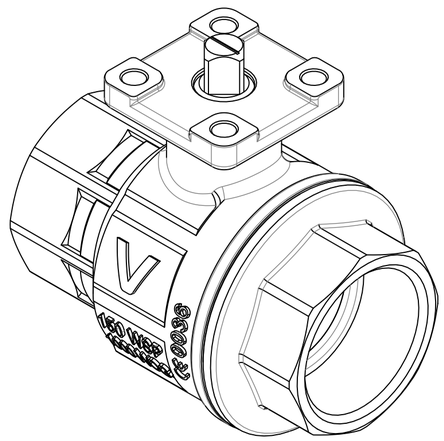

POS.	PART NAME	MATERIALS	N° P
1	CORPO / BODY	A351-CF8M	1
2	MANICOTTO / END CONNECTION	A351-CF8M	1
3	SFERA / BALL	A479-Tp316 / A351-CF8M	1
4	GUARNIZIONE SFERA / BALL SEAT	P.T.F.E.	2
5	GUARNIZIONE CORPO / BODY SEAT	P.T.F.E.	1
6	GUARNIZIONE ANTIATTRITO / ANTIFRICTION RING	P.T.F.E.	1
7	O-RING	FKM (VITON)	2
8	ASTA / STEM	A479-Tp316	1
9	GUARNIZIONE ASTA / STEM SEAT	P.T.F.E.	1
10	O-RING (1/2" - 2")	FKM (VITON)	2

SIZE	DN	I	L	H	Ch	A	C	E	ØN	B	Z	Kv	PN	Kg
1/2"	15	15	67	34,5	27	41,5	9	9	36	6	38	19,2	64	0,32
3/4"	20	16,3	78	42	32	43,5	9	9	36	6	38	35	64	0,42
1"	25	19,1	90	51,5	41	53,5	9	9	36	6	38	64,5	64	0,73
1"1/4	32	21,4	100	64,5	50	57	9	9	36	6	38	103,8	64	1,08
1"1/2	40	21,4	112	77	55	74	11	11	50	7	50	174	64	1,72
2"	50	25,7	135	97	70	83,3	11	11	50	7	50	301,3	64	3,00
2"1/2	65	30,2	160	124	87	111	15,5	14	70	9	64	545,7	25	6,06
3"	80	33,3	180	145	105	120	17,5	14/17	70	9	64	872,5	25	9,56

REV	DATE	DRAFT	APPR.	DESCRIPTION	IN PLACE OF

SIZE: A2 | SCALE | DATE: 06-07-2021 | ENGINEER SIGNATURE: Zanetti Paride | ENGINEERING GROUP LEADER SIGNATURE: Bonsi Paolo | WEIGHT (Kg)

DIMENSIONS WITHOUT ANY TOLERANCE INDICATIONS ARE REFERRED TO IT 12 IN ACCORDANCE WITH UNI ISO 286/1
BORE AND SIMILAR: + IT SHAFTING AND SIMILAR: - IT
OTHER PARTICULARS: ±1/2 IT

1 ÷ 3	0.10	10 ÷ 18	0.18	50 ÷ 80	0.30	180 ÷ 250	0.46
3 ÷ 6	0.12	18 ÷ 30	0.21	80 ÷ 120	0.35	250 ÷ 315	0.52
6 ÷ 10	0.15	30 ÷ 50	0.25	120 ÷ 180	0.40	315 ÷ 400	0.57

MATERIAL | TREATMENT

NAME: **BALL VALVE Inox-Val** **703000**
VALPRES STD **GAS ISO7/1 - EN 10226/1-Rp**

VALPRES — BONOMI GROUP

PROJECT REFERENCE: COD | REV | TAV 01

DRAWING NUMBER: COD **DMS 703000** REV A TAV 01

ACCORDING TO THE LAW IT IS FORBIDDEN ANY REPRODUCTION